SIMONA Dutchclamp





SOLO

The Dutchclamp SOLO has been developed for the simple and secure fastening of single-core cables, such as grounding, control, or auxiliary cables.

Ideal as a standalone single-core cable clamp or as an additional clamp for larger Dutchclamp cable clamps.

Advantages

- Resistant to oils, greases, aggressive chemicals, frost, heat, UV radiation, ozone, salt, moisture, acids, and nuclear radiation
- Self-extinguishing and halogen-free
- Temperature range: -60 °C to +120 °C
- Non-magnetic and electrically non-conductive
- No oxidation or corrosion
- No sharp edges
- Coloured black
- Recyclable
- Very easy to install

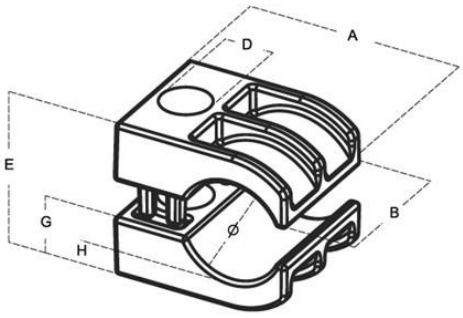

Dimensions in mm							
Type	Cable-ø	A	B	D	E	G	H
Solo 18-26	18-26	47	36	13	31-39	15.5	7.5
Solo 26-34	26-34	57	42	13	43-51	21.5	9.5
Solo 34-42	34-42	68	50	13	56-64	28	12

Subject to technical changes and errors.

25092026

SIMONA Dutchclamp b.v. | Egstraat 1 | 3319 LA Dordrecht | The Netherlands
T +31 78 - 6 211 212 | sales.dutchclamp@simona-group.com | www.dutchclamp.com