SIMONA Dutchclamp





Quad 25 - 36



QUAD 25 - 36

The Dutchclamp Quad cable clamps have been specially developed for the short-circuit-resistant fastening of single-core and multi-core low-, medium- and high-voltage cables. The Quad cable cleat consists of a two-part design, enabling quick and easy installation of four cables. Suitable for cable diameters from 25 mm to 36 mm. Quad cable clamps are stackable and may also be fastened by means of the extra centre hole.

Quad cable clamps are engineered with optimized cable support surfaces that ensure even pressure distribution and maximum grip. The absence of sharp edges eliminates point loads and helps protect cable insulation from mechanical damage.
Dutchclamp cable clamps are manufactured from high-quality glass fibre-reinforced polyamide, making them exceptionally suitable for applications where very high short-circuit forces may occur.

Manufactured from glass fibre-reinforced polyamide, the product offers exceptional resistance to corrosion, chemicals, UV radiation, extreme temperatures, and other demanding environmental influences. The clamps retain their full mechanical strength within a temperature range of -60 °C to +120 °C, with short-term exposure up to +225 °C.

Dutchclamp cable clamps have been tested in accordance with the international IEC 61914 standard by UL (Underwriters Laboratories, USA), Prof. Ir. Damstra Laboratory (Eaton), Voltalab Grenoble (Schneider Electric), SGS Brussels, and RST Rail System Testing GmbH.

With a proven track record in installations around the world, Dutchclamp Quad cable clamps are available from stock for rapid project delivery. Available as a complete solution including fastening hardware.

SIMONA Dutchclamp b.v. | Egstraat 1 | 3319 LA Dordrecht | The Netherlands
T +31 78 - 6 211 212 | sales.dutchclamp@simona-group.com | www.dutchclamp.com

SIMONA Dutchclamp

Certified in accordance with the IEC 61914 standard

Dutchclamp has been developing and producing innovative cable clamps and cable blocks for installation of low, medium and high voltage cables since 1982. The clamps have been designed in close collaboration with major energy companies. Dutchclamp is globally renowned for its quality, service and reliability. Our products are relied upon in critical infrastructure projects across more than 50 countries worldwide.

The design

With its application-specific design, each cable clamp type provides an optimal fit for secure and short-circuit resistant cable installations.

The raw material

Dutchclamp cable clamps are manufactured from premium glass fibre reinforced polyamide, ensuring outstanding mechanical performance and long-term durability. The material is self-extinguishing and halogen-free.

Robustness

Combining an innovative design with high-performance glass fibre reinforced polyamide, Dutchclamp cable cleats deliver outstanding strength and reliability. They are engineered to withstand the extreme forces that occur during short-circuit conditions and have been tested by independent laboratories.

Tests

The cable clamps have been tested by, among others, UL (The Underwriters Laboratories U.S.A), Volta laboratory in Grenoble (Schneider), KEMA, SGS Brussels and RST rail system Testing GmbH in accordance with the IEC 61914 international standard.

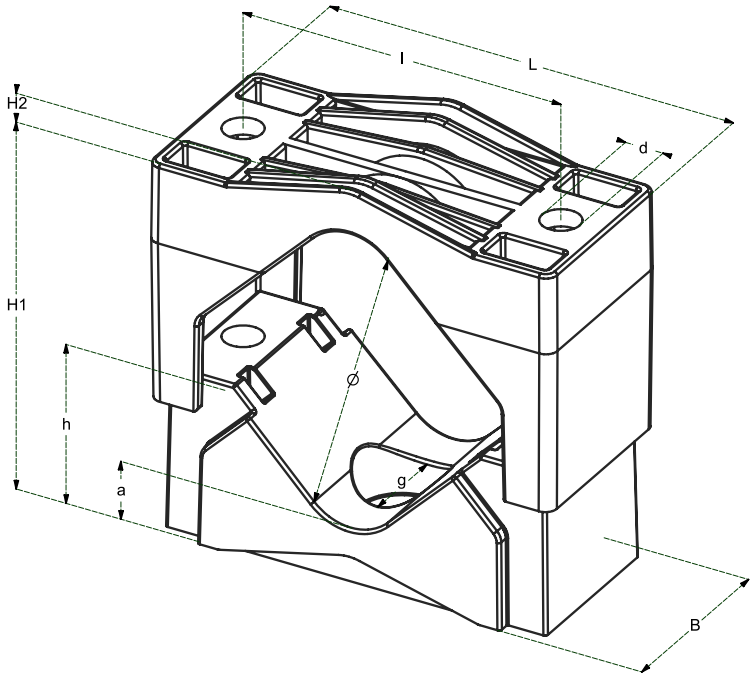

Dimensions in mm										N*
Type	Cable-ø	A	B	C	D	E	F	G	H	
25-36	25-36	140	64	110	13	82	10	55	20	12.000

*Resistance to electrodynamic forces.

Advantages

- Resistant to gigantic short-circuit currents / forces
- Resistant to oils, fats, aggressive chemicals, frost, heat, UV, ozone, salt, moisture, acids, and nuclear radiation
- Self-extinguishing, halogen free
- Temperature range from -60 °C to 120 °C (225 °C for a short period)
- Coloured black
- No magnetism / conductivity
- Custom mounting available
- Fastening materials can be supplied to size
- No oxidation / corrosion
- No sharp angles
- Recyclable
- Very simple installation
- Available worldwide
- Stackable
- Tested in accordance with IEC 61914

28102026

Subject to technical changes and errors.